Dell™ UltraSharp UP3017

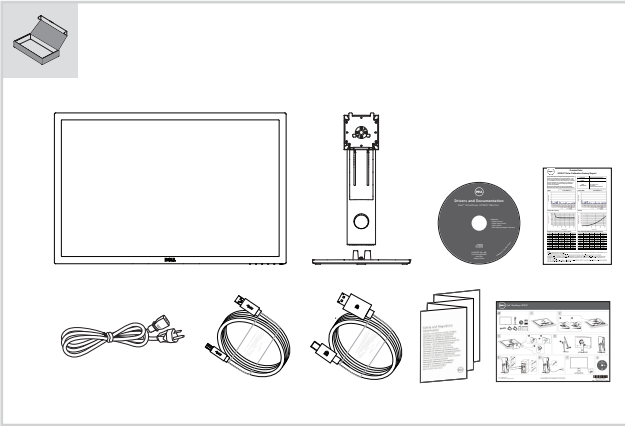

1

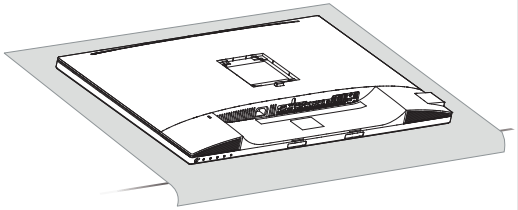

2

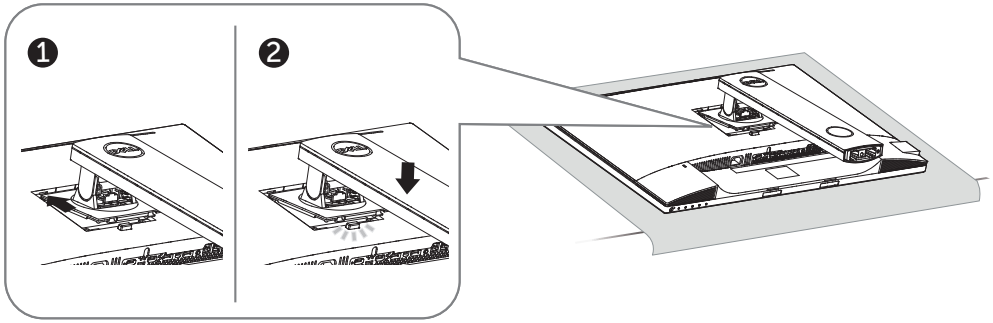

3

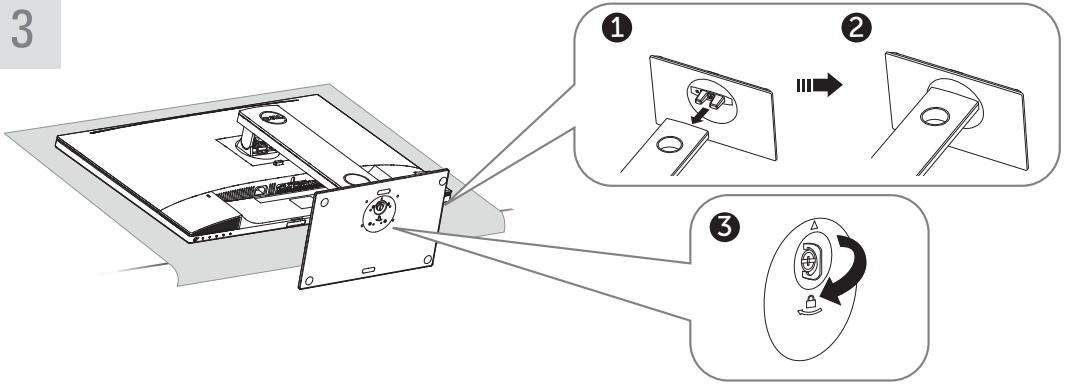

4

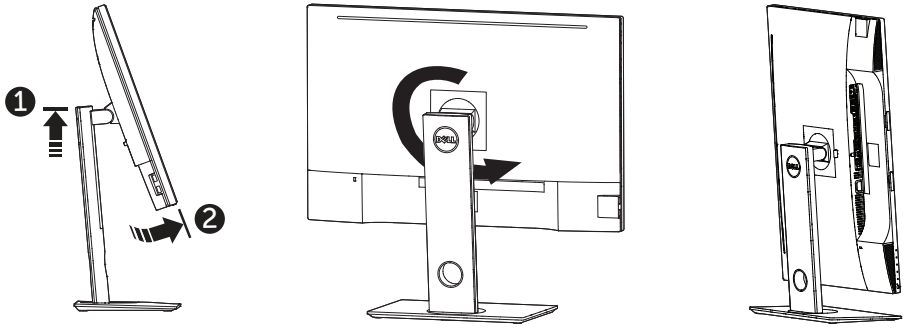

5

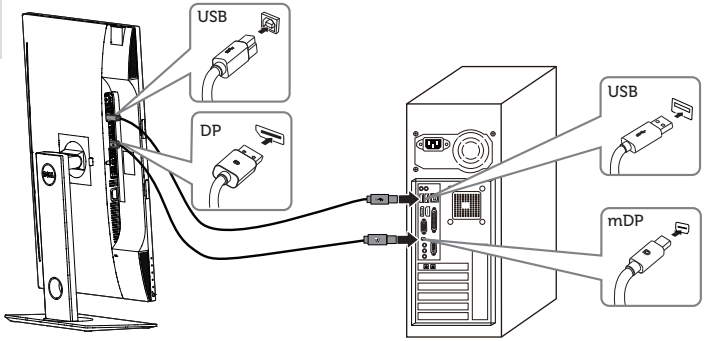

6

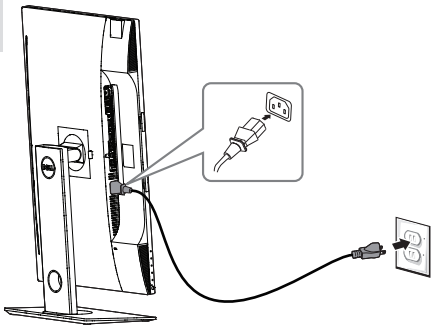

7

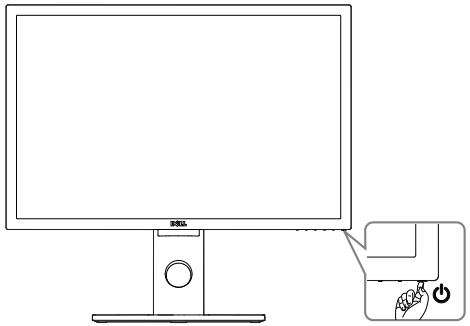

i

Printed in China.
© 2016 Dell Inc. All rights reserved.

www.dell.com/support/monitors

746.A1G01.0001
(DELL P/N:0C20V rev.A00)