UniFi® Protect G4 Instant

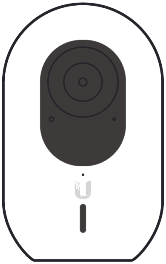

a

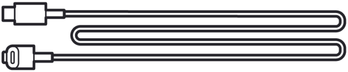

b

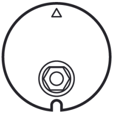

c

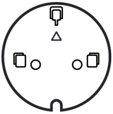

d

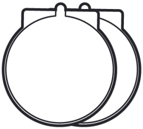

e

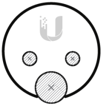

f

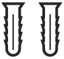

g

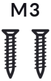

h

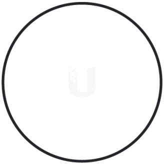

i

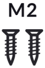

j

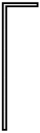

k

✓

✗

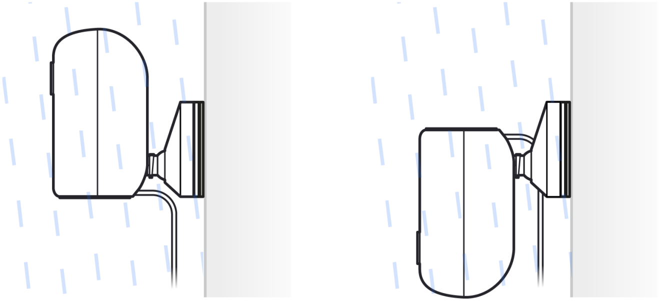

1

A

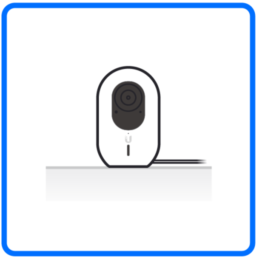

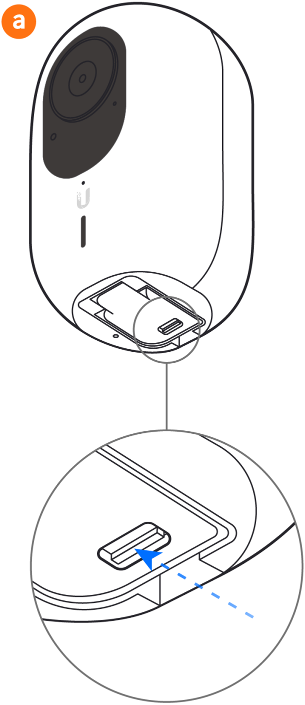

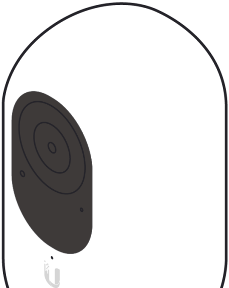

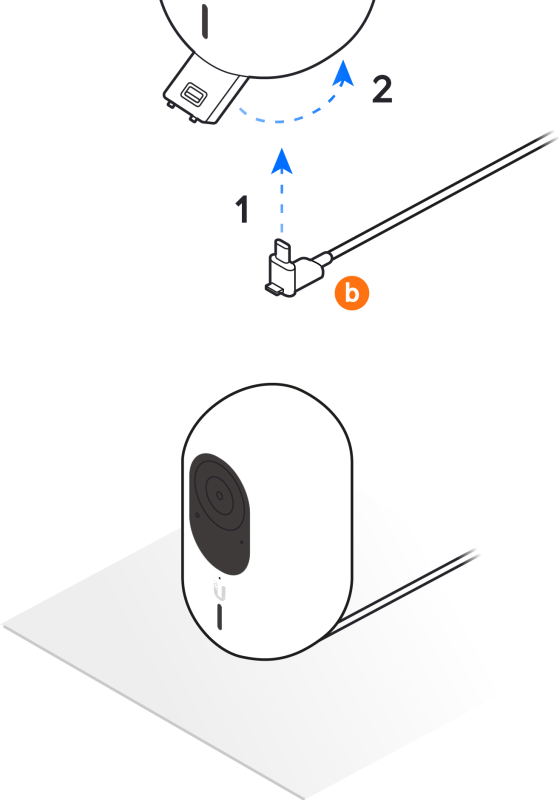

B

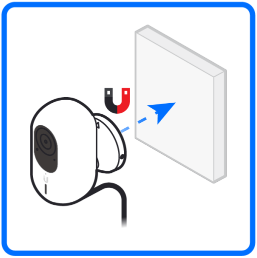

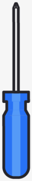

1

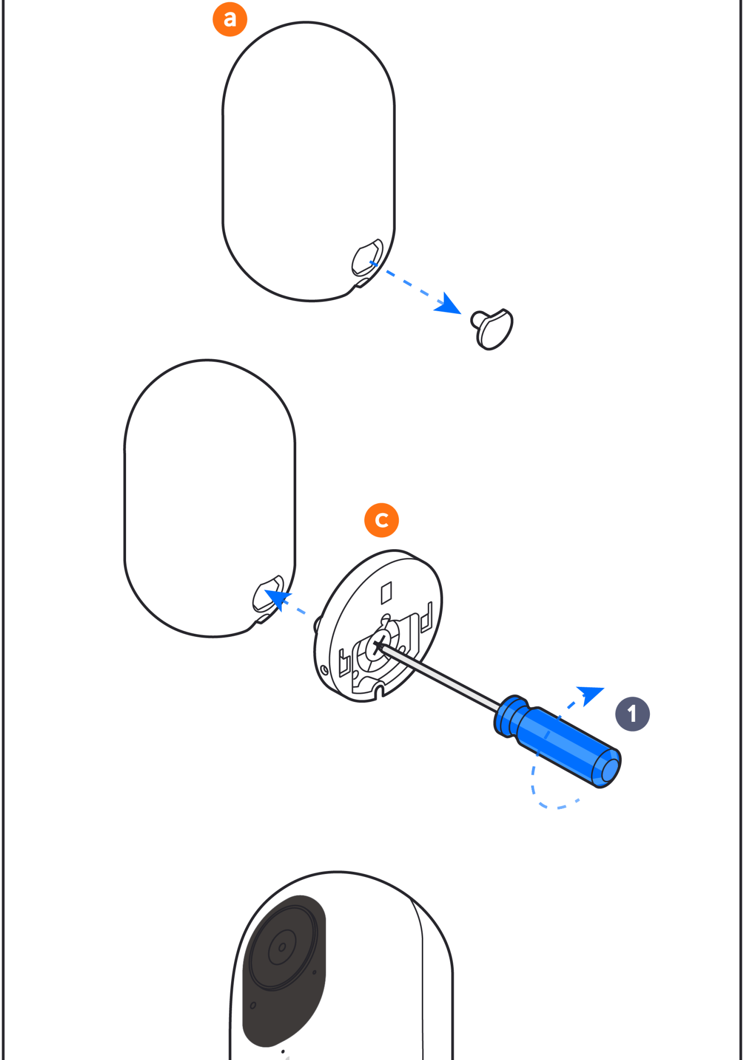

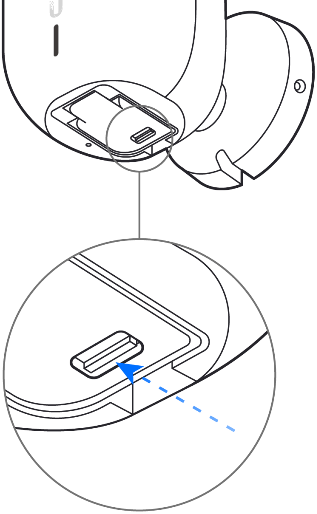

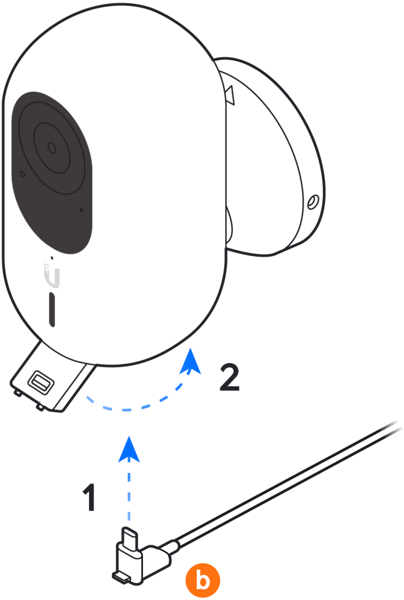

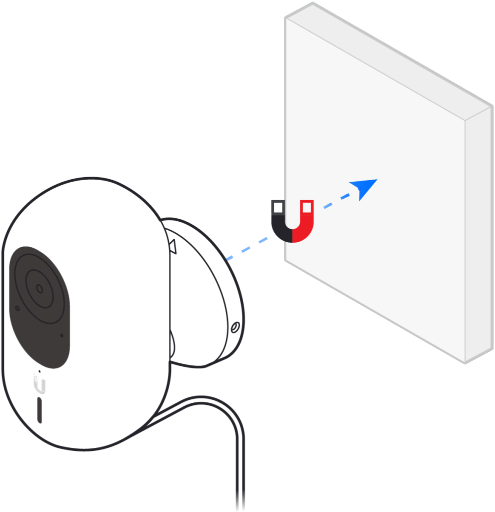

C

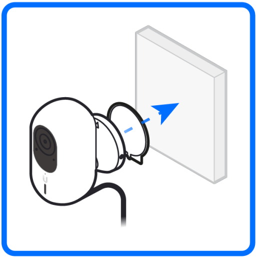

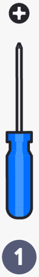

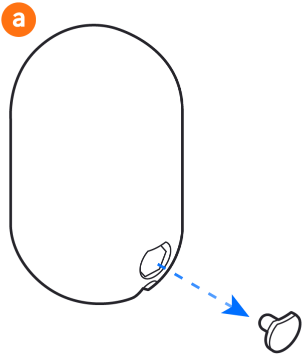

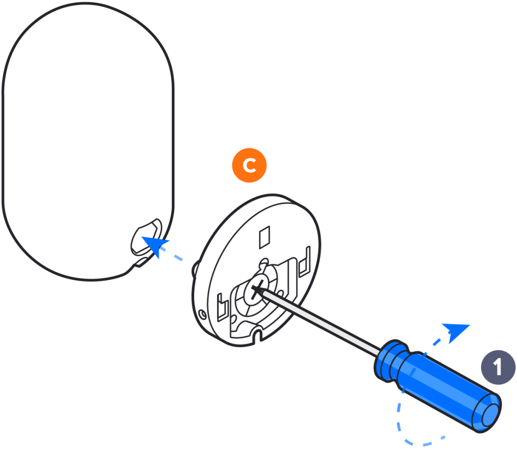

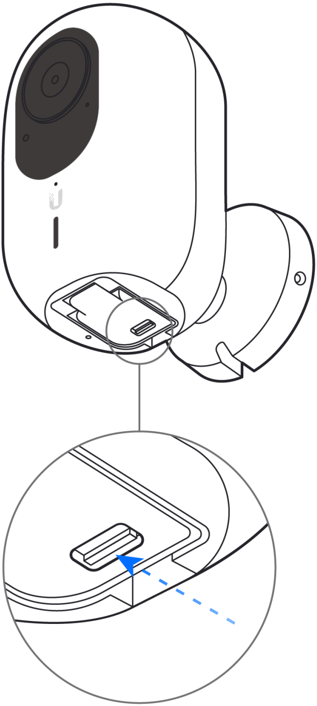

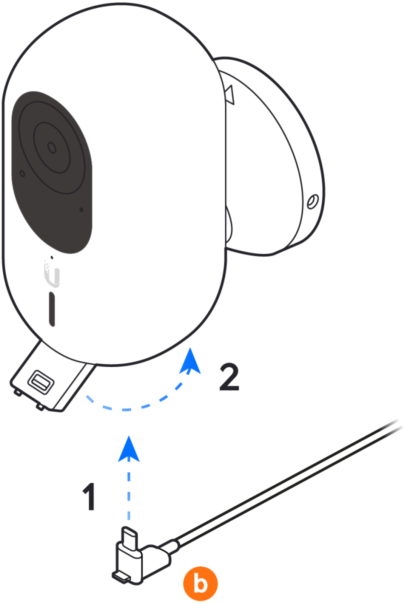

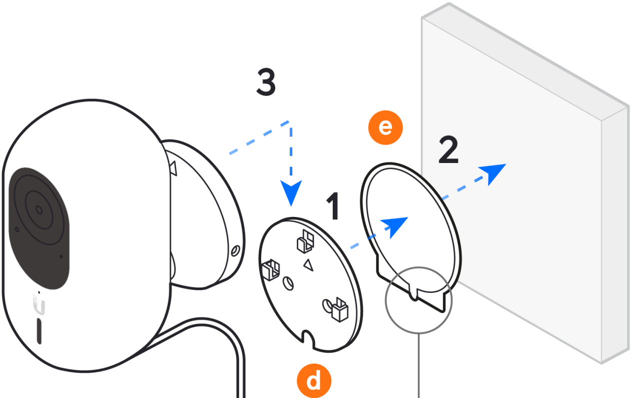

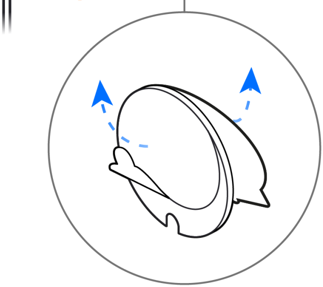

D

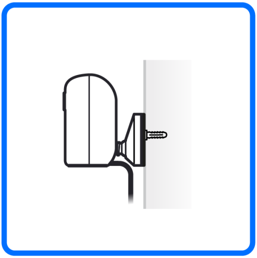

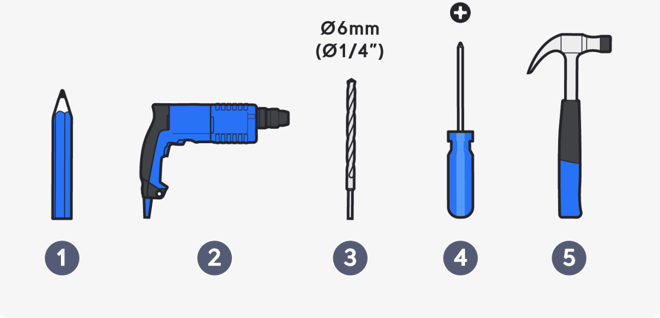
Ø6mm
(Ø1/4”)
1
2
3
4
5

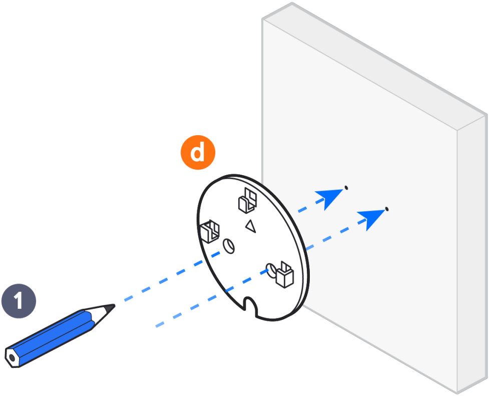

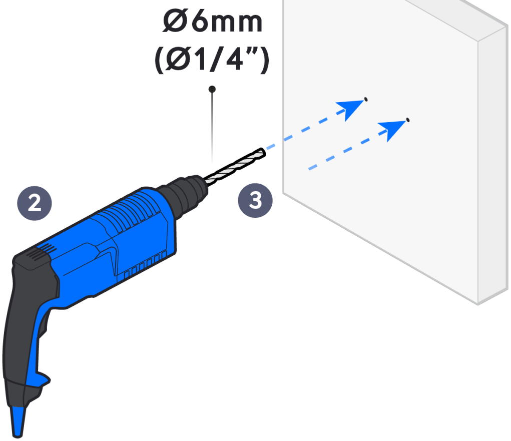

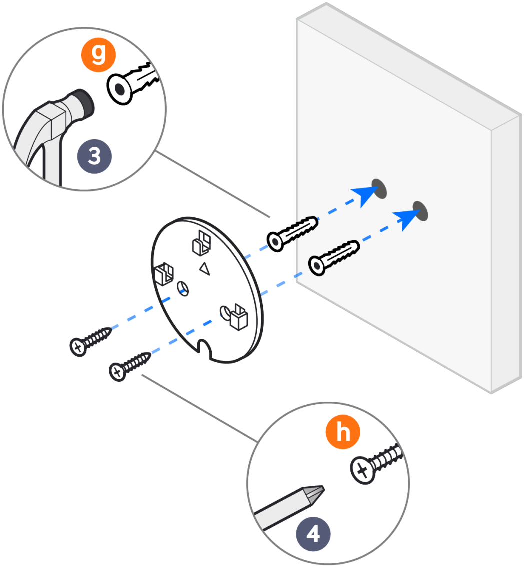

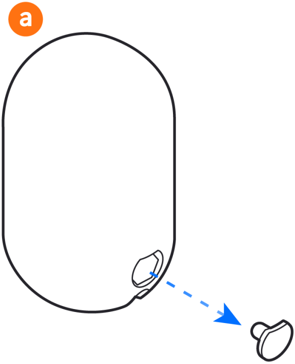

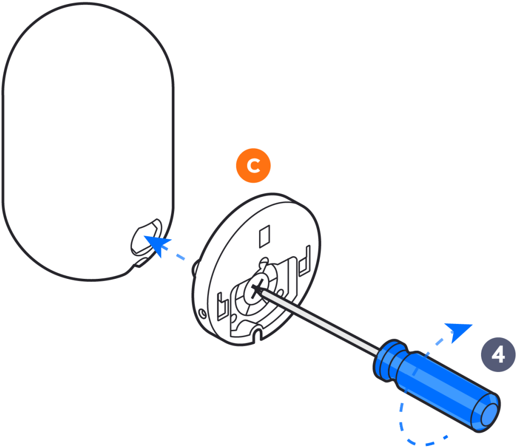

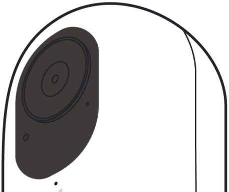

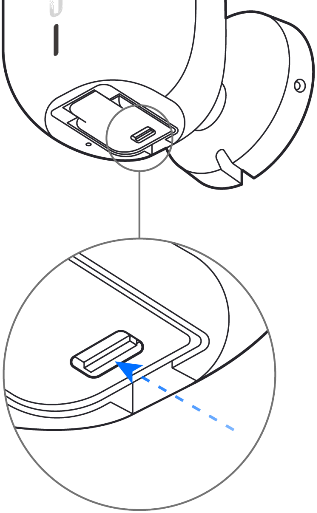

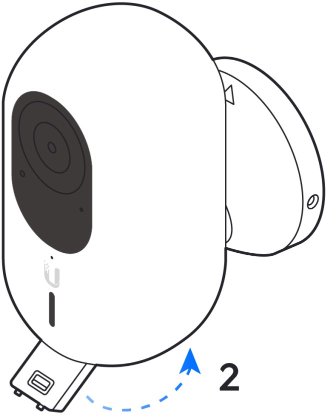

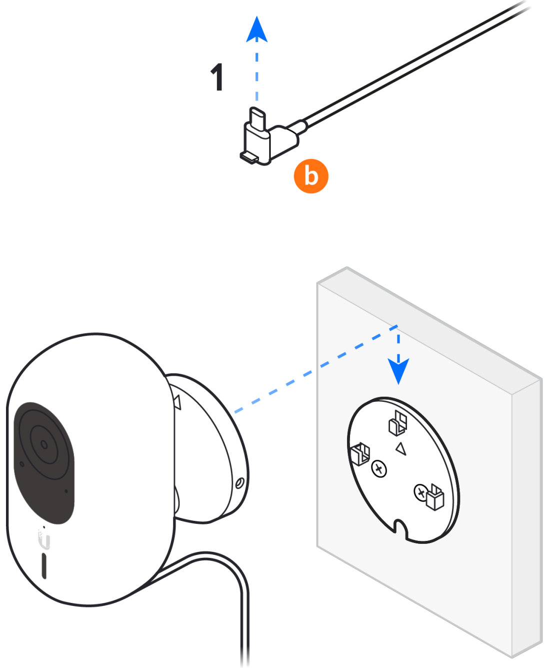

E

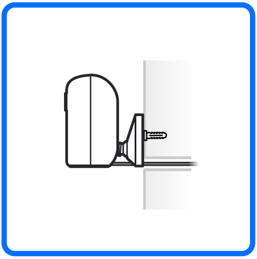

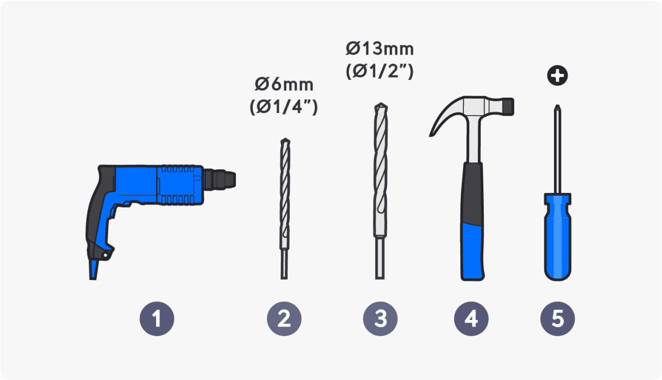
Ø6mm
(Ø1/4”)
Ø13mm
(Ø1/2”)
1
2
3
4
5

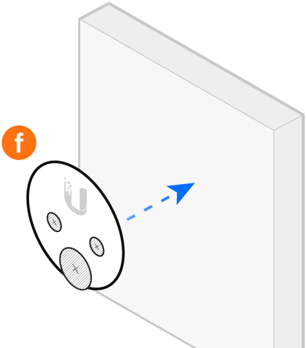

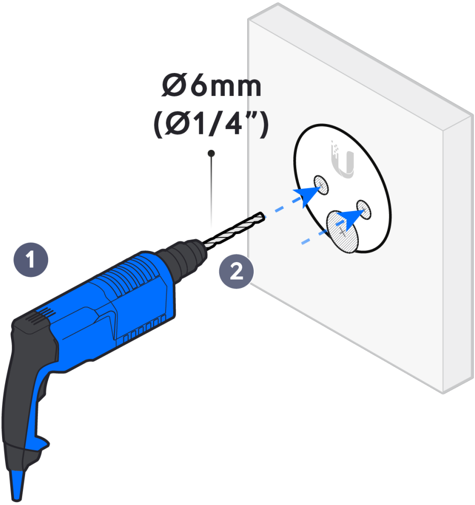

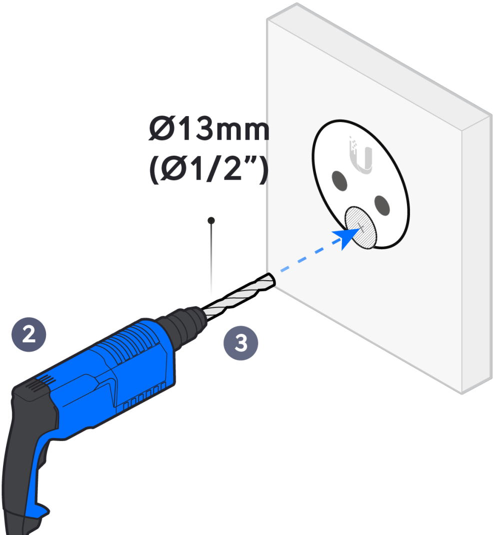
Ø13mm
(Ø1/2")
2
3

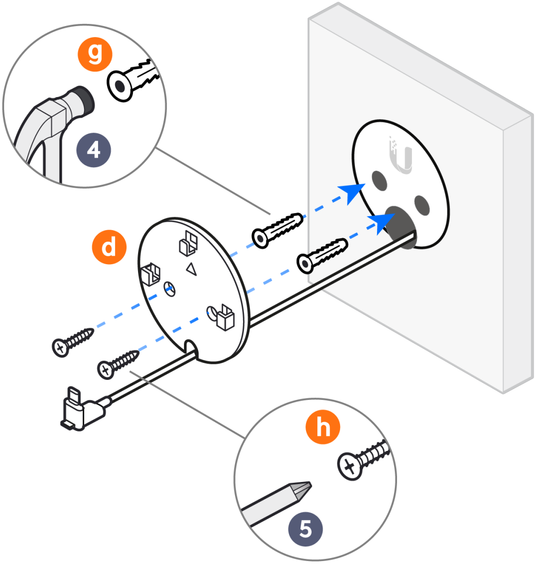

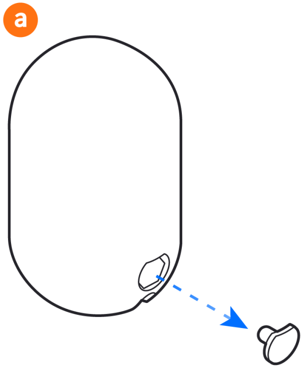

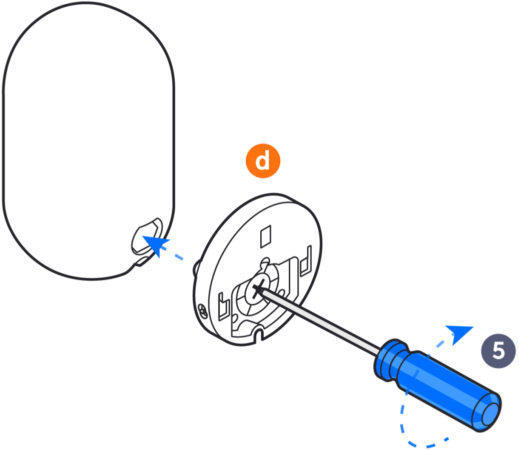

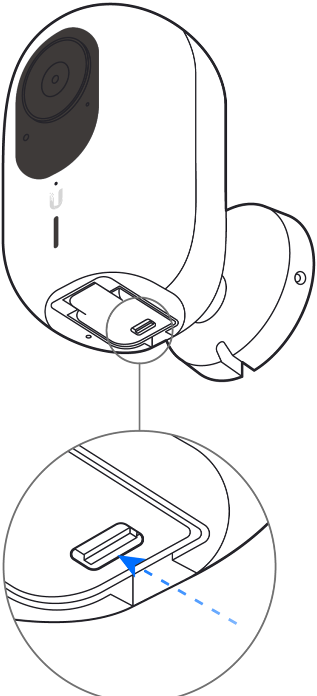

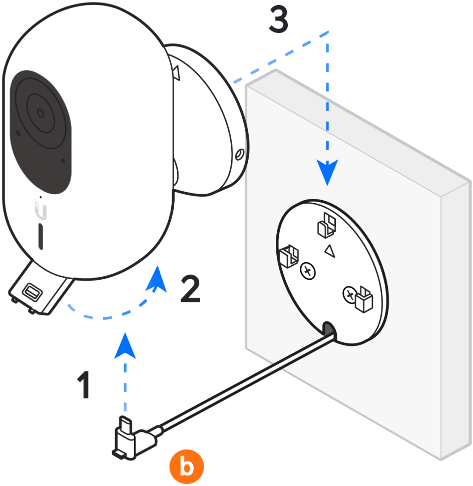

2

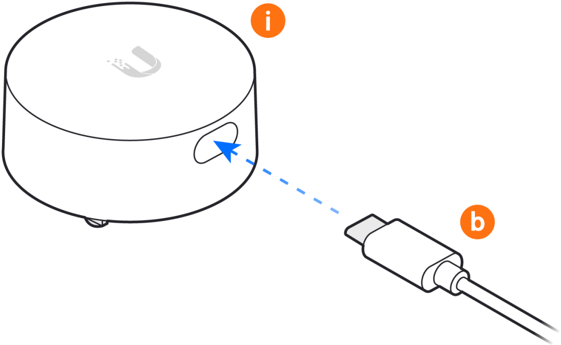

3

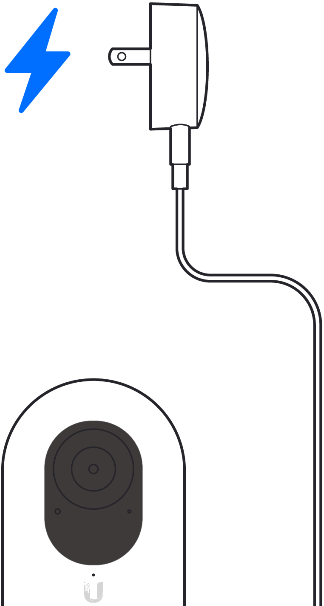

4

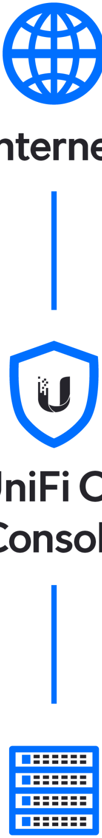
Internet
UniFi OS
Console

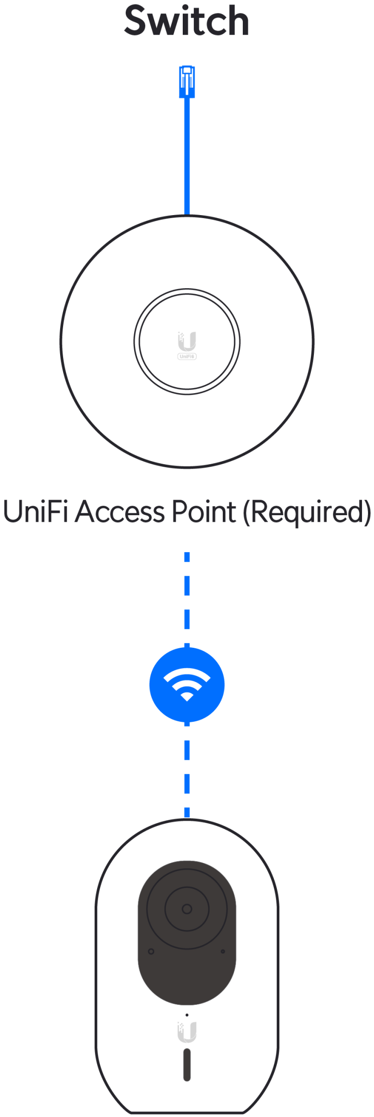
Switch
UniFi6
UniFi Access Point (Required)

5

Download on the App Store | GET IT ON Google Play

🔗 | 🔗

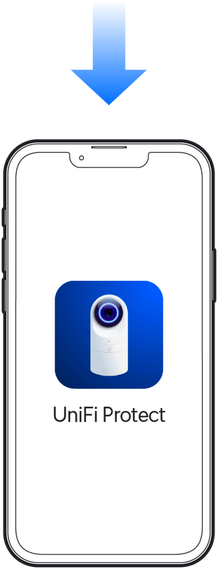
UniFi Protect

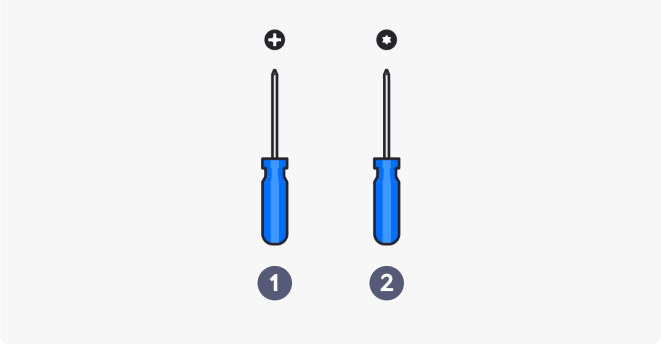

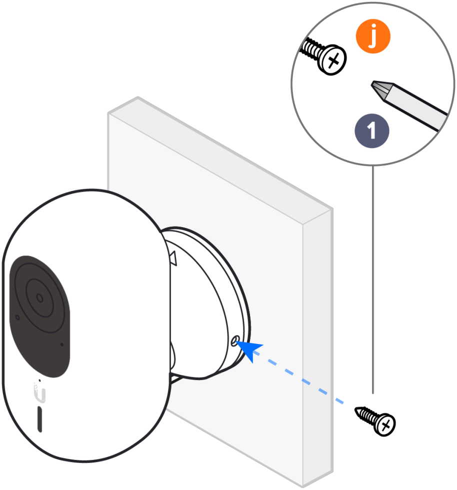

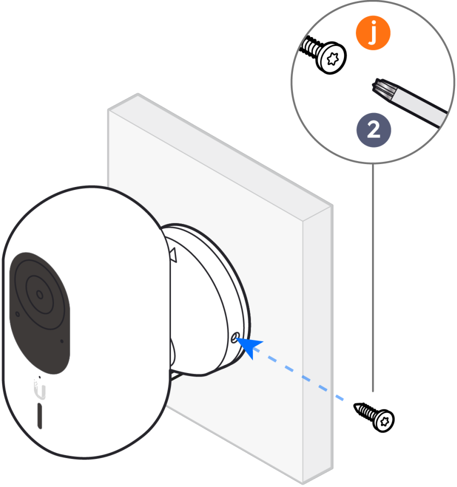

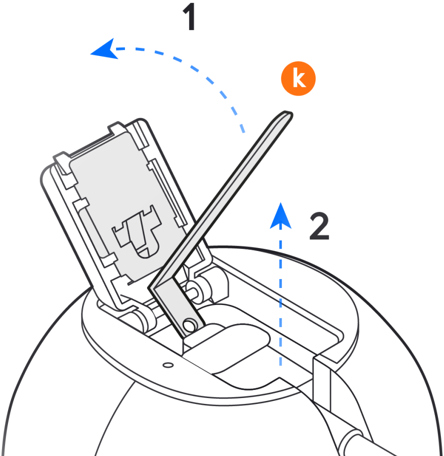

Get Answers
help.ui.com

UI Support

© 2021 Ubiquiti Inc. All rights reserved. Ubiquiti, Ubiquiti Networks, the Ubiquiti U logo, UniFi, and UniFi Protect are trademarks or registered trademarks of Ubiquiti Inc. in the United States and in other countries. App Store and the Apple logo are trademarks of Apple Inc., registered in the U.S. and other countries. Google Play and the Google Play logo are trademarks of Google LLC. All other trademarks are the property of their respective owners.